Installation manual
Wolf CE 60/120kW

Copyright

All rights to copyrights, registered trademarks, and trademarks reside with their respective owners.
Copyright ® ChargeDot. All rights reserved.

Contents

1 About this document....4

1.1 Function of this document....4
1.2 Target group....4
1.3 Revision history....4
1.4 Language....4
1.5 Illustrations....4
1.6 Units of measurement....4
1.7 Typographical conventions....4
1.8 How to use this document....4
1.9 General symbols and signal words....5
1.10 Related documents....5
1.11 Manufacturer and contact data....6
1.12 Abbreviations....6
1.13 Terminology....6
1.14 Orientation agreements....8

2 Description....9

2.1 Type plate....9
2.2 Intended use....9
2.3 Overview....10
2.3.1 Overview of the system....10
2.3.2 Overview of the EVSE (outside)....11
2.3.3 Overview of the EVSE (inside)....12

3 Safety....14

3.1 Liability....14
3.2 General safety instructions....14
3.3 Required qualifications for the installation engineer....15
3.4 Personal protective equipment....15
3.5 Safety instructions for use....15
3.6 Safety instructions during Cleaning or maintenance....15
3.7 Safety instructions for earthing....16
3.8 Discard parts or the EVSE....16

4 Transport....16

4.1 Transport the EVSE to the site....16

4.2 Transport the EVSE on the site....16

4.2.1 Move the cabinet with a forklift truck....16

5 Installation....17

5.1 General installation procedure....17

5.2 Site preparation....17

5.2.1 Prepare the site....17

5.2.2 Control the space and airflow around the cabinet....17

5.3 Prepare the foundation....17

5.3.1 Prepare the foundation - general procedure....17

5.3.2 Prepare a standard prefab foundation....18

5.4 Unpacking....19

5.4.1 Unpacking procedure....19

5.4.2 Do a check on the transport sensors....19

5.4.3 Remove the cabinet from the pallet....20

5.5 On-site installation....21

5.5.1 Mechanical installation procedure....21

5.5.2 Wiring preparation....21

5.5.3 Guide the cables through the opening in the cable guide plate....21

5.5.4 Install the cabinet on the foundation....22

5.5.5 Connect the wires of the AC input cable....22

5.6 Prepare for commissioning....23

6 Troubleshooting....23

6.1 Troubleshooting procedure....23

7 Technical data....24

7.1 Required tools for installation....24

7.2 Dimensions....24

7.2.1 General dimensions....24

7.2.2 Package dimensions....24

7.2.3 Floor space requirements....25

7.3 Parameter....26

1 About this document

1.1 Function of this document

The document is only applicable for this EVSE (Wolf CE), including the variants and options listed in section 7.
The document gives the information that is necessary to install the EVSE.

1.2 Target group

The document is intended for qualified installation engineers.
For a description of the required qualifications, refer to section 3.3.

1.3 Revision history

Version	Date	Description
001	July 2026	Initial version

1.4 Language

The original instructions of this document are in English (EN-US). All other language versions are translations of the original instructions.

1.5 Illustrations

It is not always possible to show the configuration of your EVSE. The illustrations in this document show a typical setup. They are for instruction and description only.

1.6 Units of measurement

SI units of measurement (metric system) are used. If necessary, the document shows other units between parentheses () or in separate columns in tables.

1.7 Typographical conventions

The lists and steps in procedures have numbers (123) or letters (abc) if the sequence is important.

1.8 How to use this document

1. Make sure that you know the structure and contents of this document.
2. Read the safety chapter and make sure that you know all the instructions.
3. Do the steps in the procedures fully and in the correct sequence.
4. Keep the document in a safe location that you can easily access. This document is a part of the EVSE.

1.9 General symbols and signal words

Symbol	Description
	You must read the manual or relative documents before you install the EVSE.
	General warning, if you do not abbey the instruction, this can cause injury or death.
	Hazard voltage that gives risk of electrocution.
	Hot surface that gives risk of burn injuries.
	Electrotechnical expertise is required, according to the local rules.
	Protective Earth (PE)
	Alternative current
	Direct current
	The symbol indicating separate collection for EEE consists of the crossed-out wheeled bin, as shown below. The symbol must be printed visibly, legibly and indelibly.

1.10 Related documents

Document name	Target group
Product data sheet	All target groups
Installation manual	Qualified installation engineer
User manual	Owner
Declaration of conformity	All target groups

1.11 Manufacturer and contact data

Chargedot Shanghai New Energy Technology Co., Ltd.
No. 2368, Hongjian Road, Pinghu Economic Development Zone, Jiaxing, Zhejiang Province, P.R. China
E-mail address: afterservice@chargedot.com

1.12 Abbreviations

Abbreviation	Definition
AC	Alternating current
DC	Direct current
CAN	Controller area network
EV	Electric vehicle
EVSE	Electric vehicle supply equipment
CCS	Combined Charging System, a standard charging method for EV
CPU	Central processing unit
EMC	Electromagnetic compatibility
HMI	Human Machine Interface
MCB	Miniature circuit breaker
NFC	Near field communication
OCPP	Open charge point protocol
PE	Protective earth
PPE	Personal protective equipment
RFID	Radio-frequency identification
SPD	Surge protective devices

Note: It is possible that not all abbreviations are present in this document.

1.13 Terminology

Term	Definition
Network operating center of the manufacturer	Facility of the manufacturer to do a remote check on the correct operation of the EVSE
Cabinet	Enclosure of the EVSE, including the components on the inside
Contractor	Third party that the owner or site operator hires to do engineering, civil and electrical installation work
Grid provider	Company that is responsible for the transport and distribution of electricity

Term	Definition
Local rules	All rules that apply to the EVSE during the entire lifecycle of The EVSE. The local rules also include the national laws and regulations.
Open charge point protocol	Open standard for communication with charge station
Protective devices	Devices for the personal protection of individuals against the risk of injury or electrical shock when they do commissioning, operation and maintenance activities. Examples of protective devices are a door, the electrical parts covers, the latches, etc.
Qualified installer	The installer is a qualified person to install the EVSE according to the applicable local rules and fully knows the EVSE and its safe installation.The qualified installer obeys all local rules and the instructions in the operation and installation manual.
Owner	Legal owner of the EVSE
Site operator	Entity that is responsible for the day-to-day control of the EVSE. The site operator does not have to be the owner.
User	Owner of an EV, who uses the EVSE to charge the EV

Note: It is possible that not all terms are present in this document.

1.14 Orientation agreements

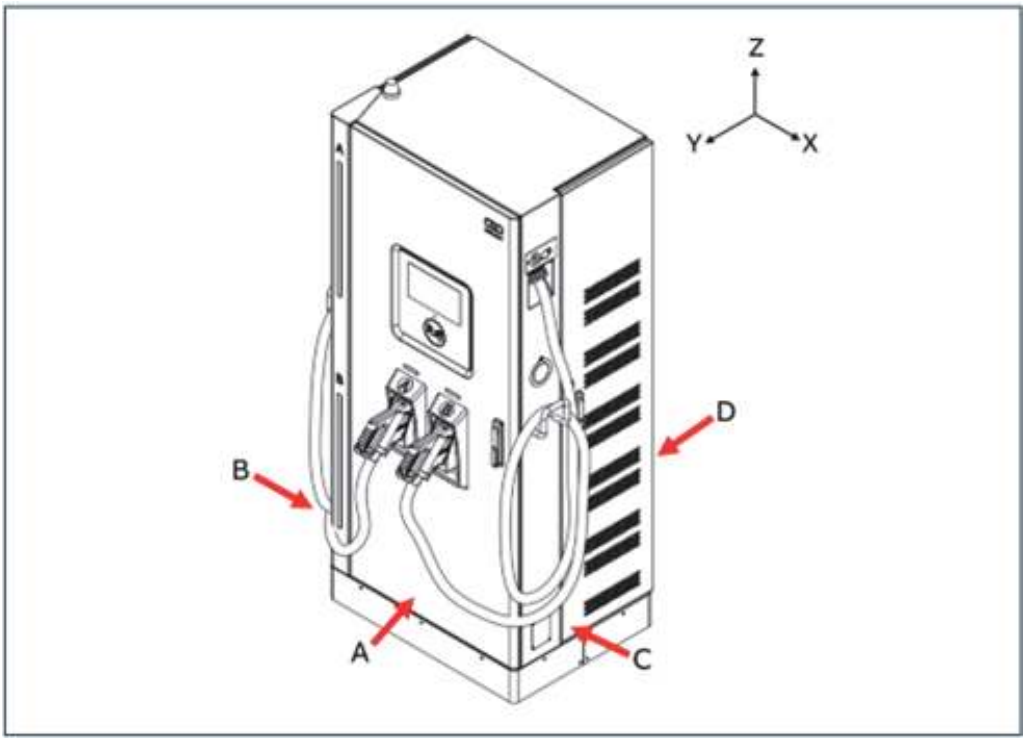

A	Front side: face forward to the EVSE (during normal use)	X	X-direction (positive is to the right)
B	Left side	Y	Y-direction (positive is rearward)
C	Right side	Z	Z-direction (positive is upward)
D	Rear side		

2 Description

2.1 Type plate

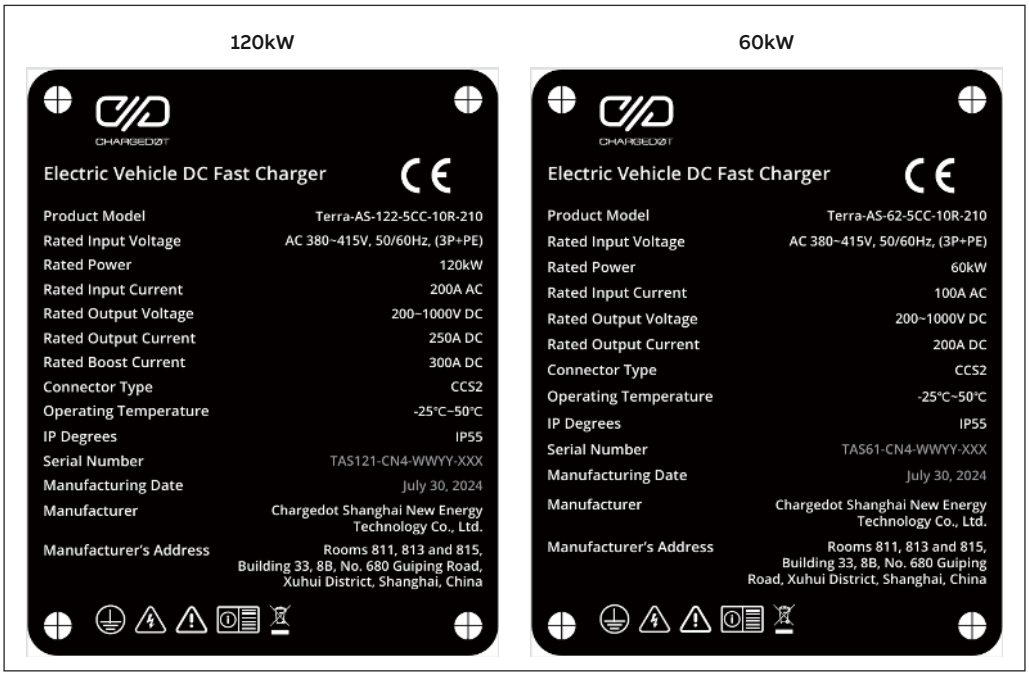

120kW

Electric Vehicle DC Fast Charger

Product Model	Terra-AS-122-5CC-10R-210
Rated Input Voltage	AC 380~415V, 50/60Hz, (3P+PE)
Rated Power	120kW
Rated Input Current	200A AC
Rated Output Voltage	200~1000V DC
Rated Output Current	250A DC
Rated Boost Current	300A DC
Connector Type	CCS2
Operating Temperature	-25°C~50°C
IP Degrees	IP55
Serial Number	TAS121-CN4-WWYY-XXX
Manufacturing Date	July 30, 2024
Manufacturer	Chargedot Shanghai New Energy Technology Co., Ltd.
Manufacturer's Address	Rooms 811, 813 and 815, Building 33, 8B, No. 680 Guiping Road, Xuhui District, Shanghai, China

60kW

Electric Vehicle DC Fast Charger

Product Model	Terra-AS-62-5CC-10R-210
Rated Input Voltage	AC 380~415V, 50/60Hz, (3P+PE)
Rated Power	60kW
Rated Input Current	100A AC
Rated Output Voltage	200~1000V DC
Rated Output Current	200A DC
Connector Type	CCS2
Operating Temperature	-25°C~50°C
IP Degrees	IP55
Serial Number	TAS61-CN4-WWYY-XXX
Manufacturing Date	July 30, 2024
Manufacturer	Chargedot Shanghai New Energy Technology Co., Ltd.
Manufacturer's Address	Rooms 811, 813 and 815, Building 33, 8B, No. 680 Guiping Road, Xuhui District, Shanghai, China

***The nameplate information contained in the template shall be subject to the physical product. Changes, if any, will not be notified separately.**

2.2 Intended use

The EVSE is intended for the DC charging of EVs. The EVSE is intended for indoor or outdoor use.
The properties of the electrical grid, the ambient conditions and the EV must comply with the technical data of the EVSE. Refer to chapter 7.
Only use the EVSE with accessories that the manufacturer provides or that obey the local rules.

2.3 Overview

2.3.1 Overview of the system

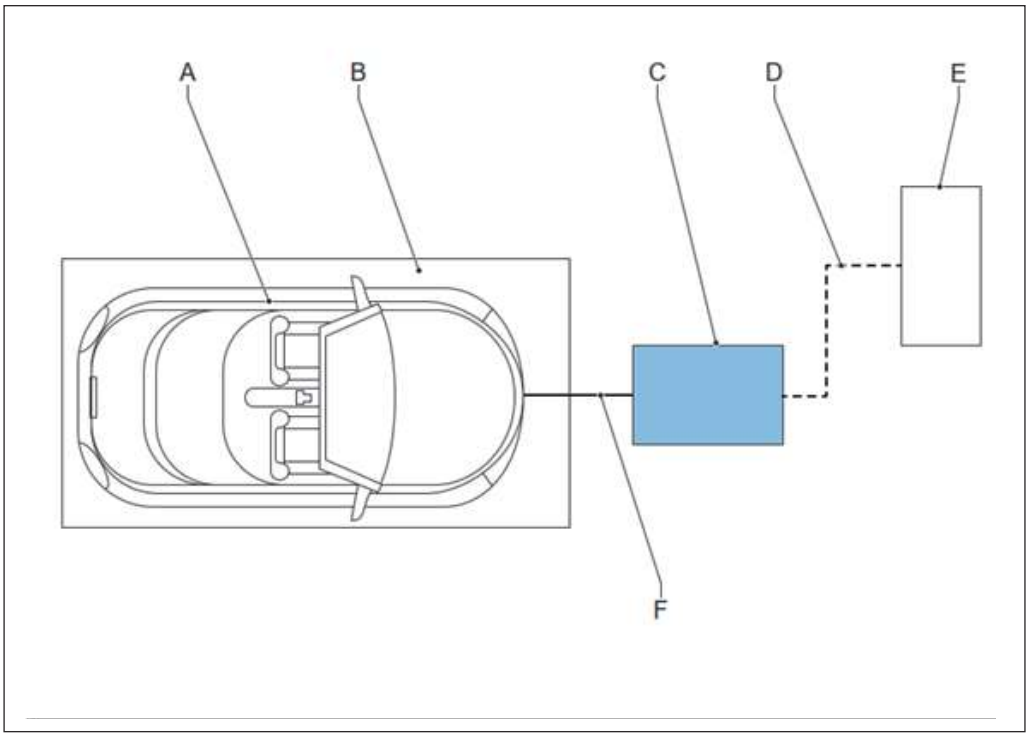

A	EV	D	AC input cable
B	Parking space	E	Power distribution board
C	EVSE	F	EV charge cable

Part	Function
EVSE	Refer to section 2.4.2.
AC input cable	To supply the electrical energy to the EVSE
EV charge cable	To conduct the current from the EVSE to the EV
EV	The EV of which the batteries need to be charged
Parking space	Location for the EV during the charge session
Power distribution board	To connect the EVSE to the AC grid input

2.3.2 Overview of the EVSE (outside)

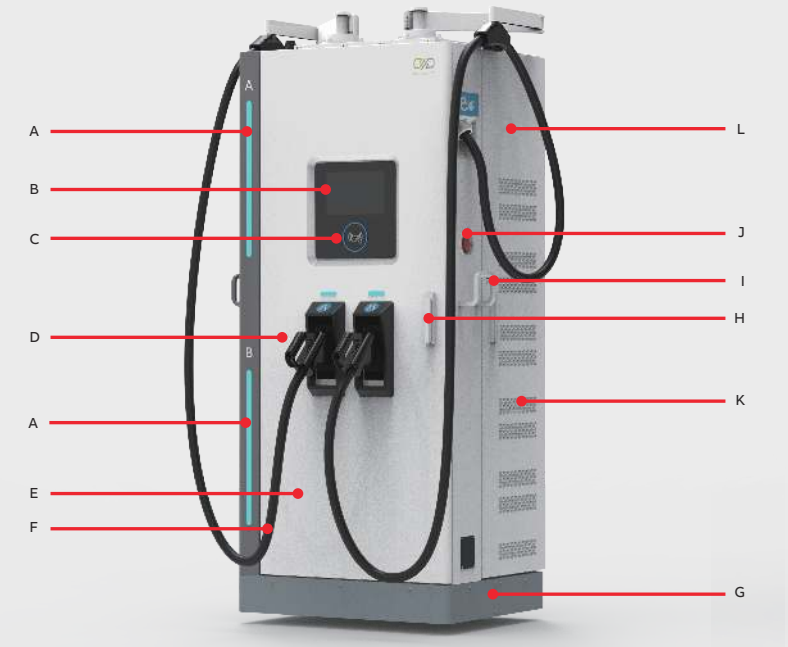

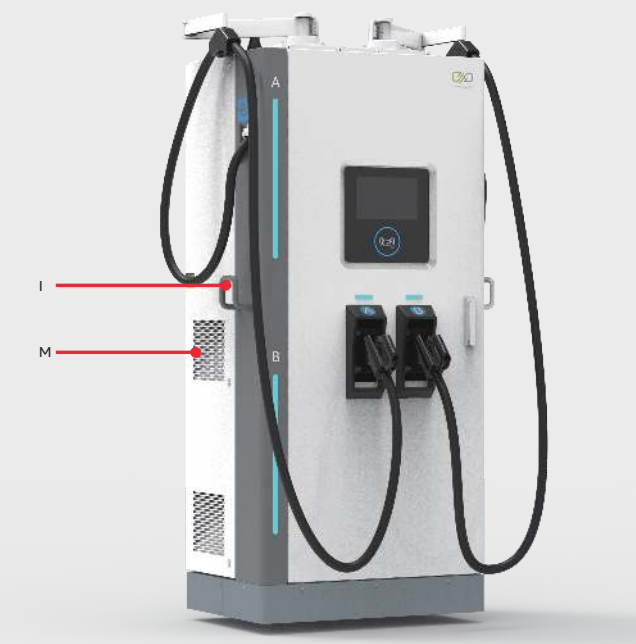

Wolf CE 60kW

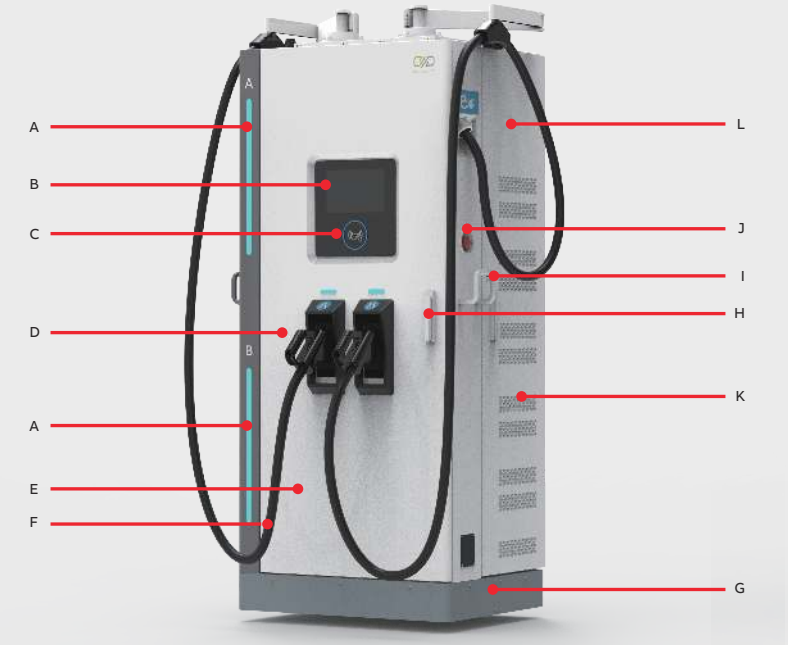

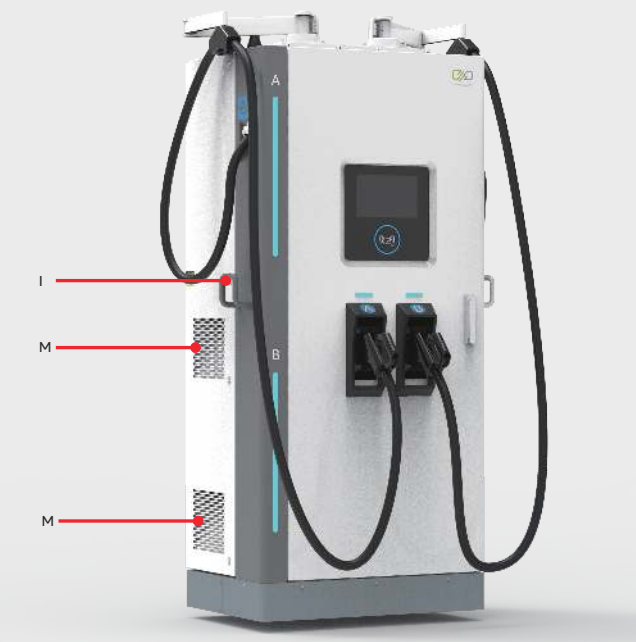

Wolf CE 120kW (Dual air outlets)

A	LED indicator light	H	Lock
B	10” screen	I	Cable hook
C	Swipe area	J	Emergency stop button
D	Charging gun	K	Air inlet
E	Front door	L	Side door
F	Charging cable	M	Air outlet
G	Base		

2.3.3 Overview of the EVSE (inside)

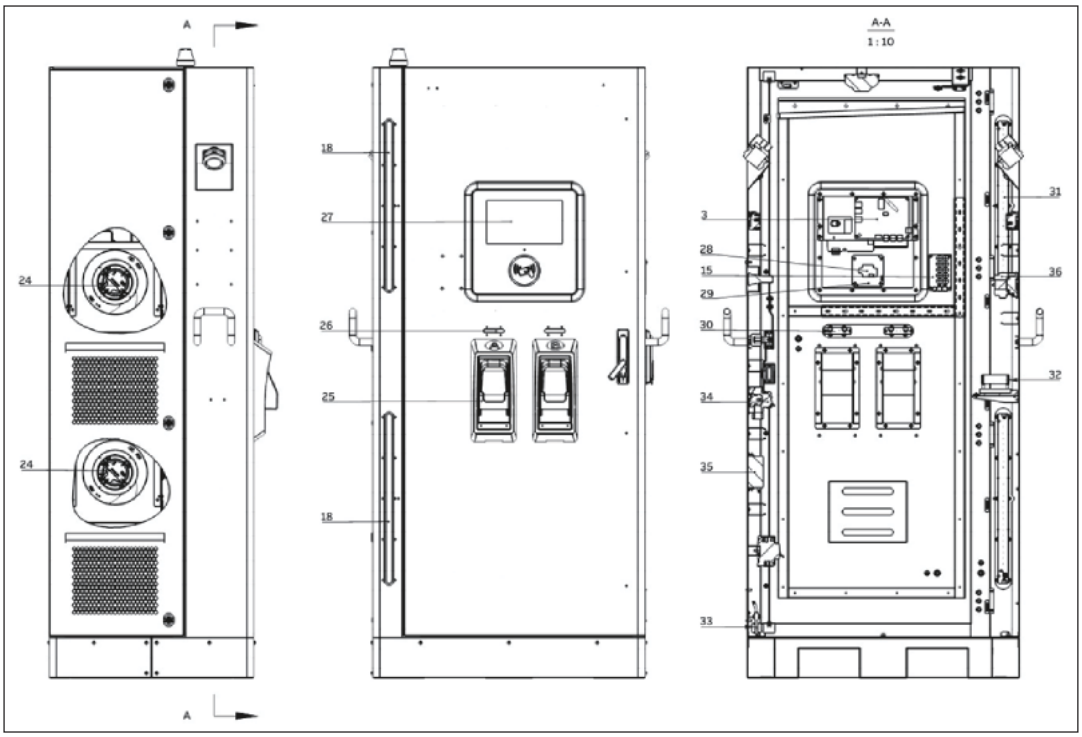

The front (outside and inside) and side view of Wolf CE 60/120kW

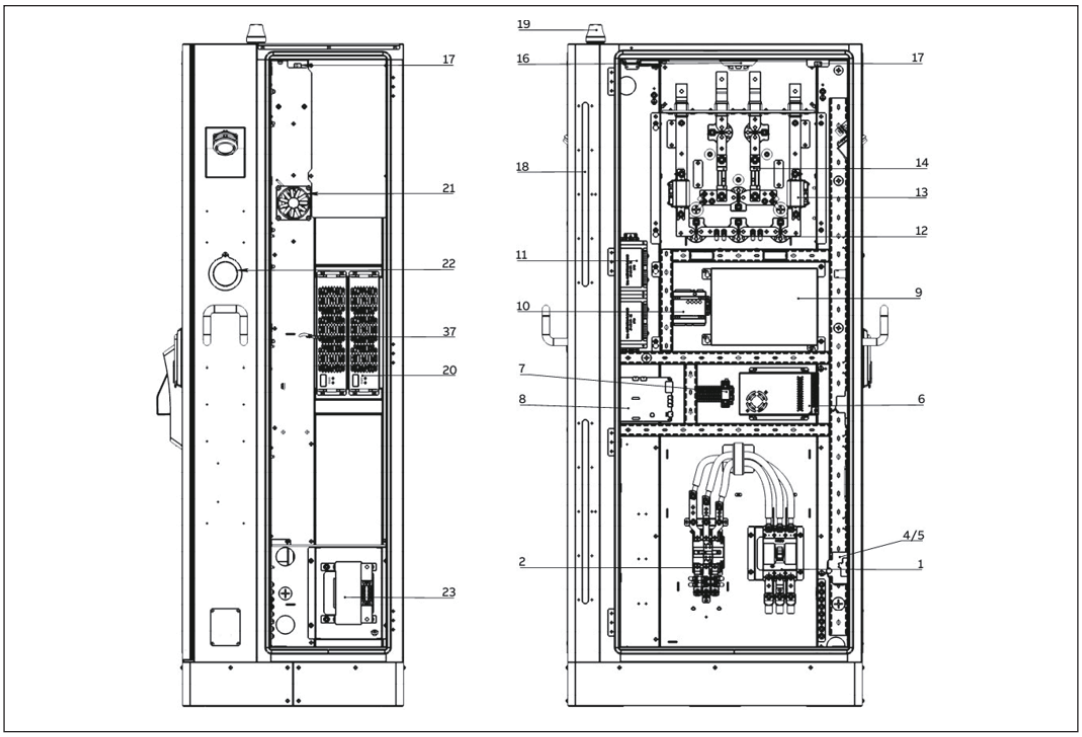

Inside view of Wolf CE 60kW

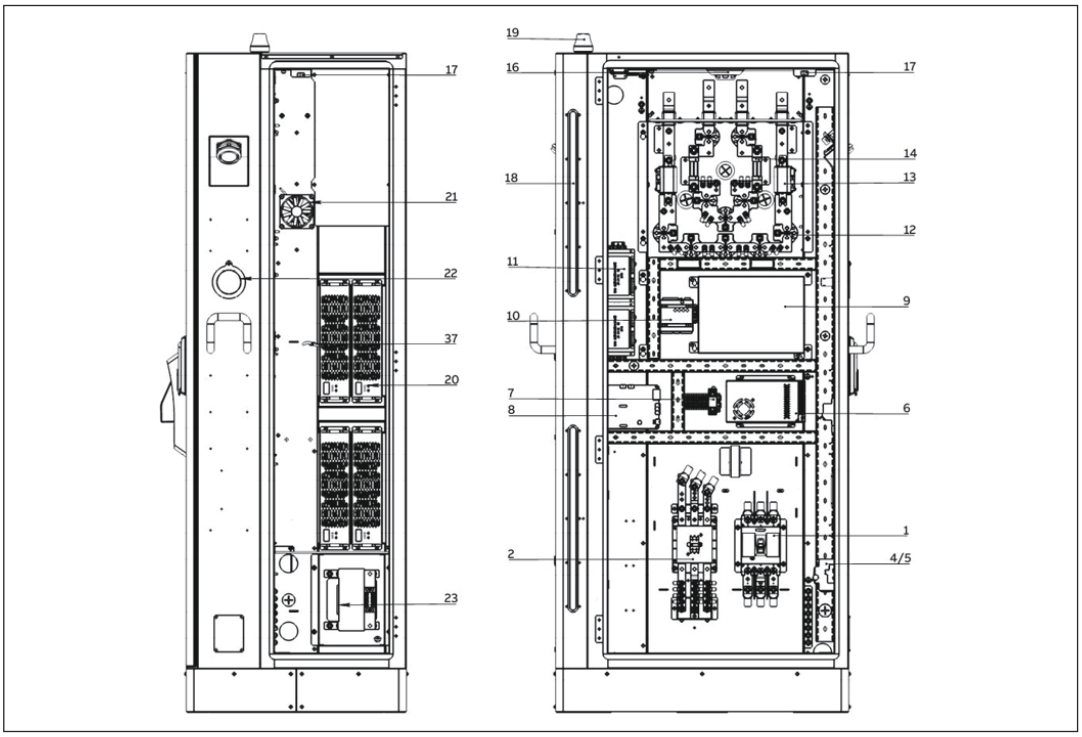

Inside view of Wolf CE 120kW

The difference between Wolf CE 60 & 120kW, is as following:

- The numbers of power modules
- The specification and quantity of components (for example: RCD, DC contactor, centrifugal fan)
- The output units

1、Circuit breaker
2、AC contactor
3、Business Control Unit
4、Surge protection device
5、Micro Circuit Breaker
6、Power Supply
7、Relay
8、AC/DC sampling board
9、Charging Control Unit
10、DC meter
11、Insulation monitoring device
12、DC contactor
13、Fuse
14、Shunt
15、Super capacitive board
16、Smoke sensor
17、Limit switch
18、LED 1
19、Antenna
20、Power module
21、Centrifugal fan 1
22、Emergency stop button
23、Transformer
24、Centrifugal fan 2
25、Charge gun socket
26、LED 2
27、10” screen
28、NFC board
29、LED board 3
30、LED board 2
31、LED board 1
32、Heater
33、Water leakage sensor
34、Leakage circuit breaker
35、Filter
36、AC contactor 2
37、Temperature sensor

3 Safety

3.1 Liability

The manufacturer shall not be liable to the purchaser of the EVSE or to any third party for any damage, loss, cost or expense incurred by the purchaser or any third party as a result of failure to comply with any of the following instructions:

- Follow the instructions in the relevant documents. Refer to section 1.11.
- Do not misuse or abuse the EVSE.
- Only make changes to the EVSE, if the manufacturer approves in writing of the changes.

This EVSE is designed to be connected to and to communicate information and data via a network interface. It is the sole responsibility of the owner to provide and continuously ensure a secure connection between the EVSE and the network of the owner or any other network.

The owner shall establish and maintain any appropriate measures (such as - but not limited to the installation of firewalls, application of authentication measures, encryption of data and installation of anti-virus programs) to protect the EVSE, the network, its system and the interface against any kind of security breaches, unauthorized access, interference, intrusion, leakage and/or theft of data or information.

The manufacturer is not liable for damages and/or losses related to such security breaches, any unauthorized access, interference, intrusion, leakage and/or theft of data or information.

The manufacturer declares that the equipment complies with the regulations currently in force in the country of installation and has issued the corresponding declaration of conformity.

3.2 General safety instructions

This document, the related documents and the warnings included do not replace your responsibility to use your common sense when you do work on the EVSE.

- Only do the procedures that the related documents show and that you are qualified for.
- Obey the local rules and the instructions in this manual. If the local rules contradict the instructions in this manual, the local rules will apply.
- If and to the extent permitted by law, in case of inconsistency or contradiction, between any requirements or procedure contained in this document and any such local rules, obey the stricter between the requirements and procedures specified in this document and the local rules.

3.3 Required qualifications for the installation engineer

- The qualified installation engineer fully knows the EVSE and its safe installation.
- The installation engineer is qualified to work on high-voltage and high-current electrical installations.
- The qualified installation engineer obeys all local rules and the instructions in the installation manual.
- It is the responsibility of the owner of the EVSE to make sure that all qualified installation engineers obey the local rules, the installation instructions, and the specifications of the EVSE.

3.4 Personal protective equipment

Symbol	Description
	Protective clothing
	Safety gloves
	Safety shoes
	Safety glasses

3.5 Safety instructions for use

In the situations that follow, do not use the EVSE and immediately contact the manufacturer:

- An enclosure has damage.
- An EV charge cable or connector has damage.
- Lightning struck the EVSE.
- There was an accident or a fire at or near the EVSE.
- Water has entered the EVSE.

3.6 Safety instructions during Cleaning or maintenance

- Keep unauthorized personnel at a safe distance during cleaning or maintenance.
- If for cleaning or maintenance it is necessary to remove safety devices, immediately install the safety devices after the work.
- Obey the safety instructions that apply to the hoisting equipment or the forklift truck.
- Put on the correct personal protective equipment. Refer to section 3.4.

3.7 Safety instructions for earthing

- Make sure that the EVSE is connected to an earthed, metal, permanent electrical system. Alternatively, install an equipment-earthing conductor with circuit conductors. Connect this earthing conductor to an equipment-earthing terminal lead on battery charger.
- Make sure that the connections to the EVSE comply with all applicable local rules.

3.8 Discard parts or the EVSE

- Obey the local rules to discard parts, packaging material or the EVSE.

4 Transport

4.1 Transport the EVSE to the site

A transport company delivers the EVSE close to the site. The movement of the EVSE to its final location is your responsibility.
If you need to store the EVSE before installation, obey the ambient conditions for storage (-40°C~70°C).

4.2 Transport the EVSE on the site

4.2.1 Move the cabinet with a forklift truck

Procedure:

- Move the toes(A) of the forklift truck into the gaps at the side of the cabinet.
- Move the cabinet to the correct position.

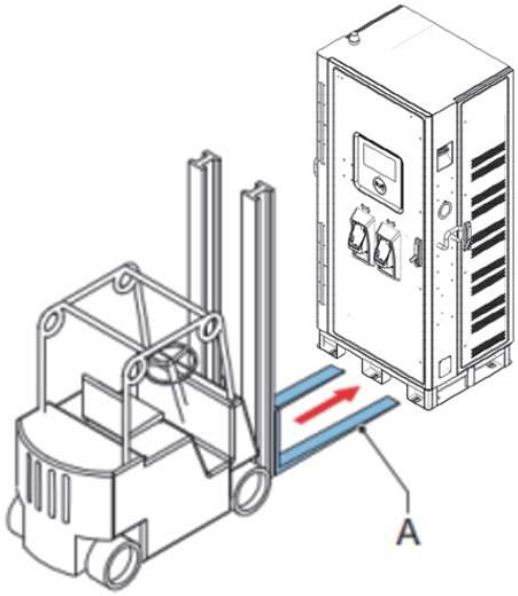

5 Installation

5.1 General installation procedure

Procedure:

- Prepare the site. Refer to section 5.2.1.
- Unpack the EVSE. Refer to section 5.4.1.
- Move the cabinet above the correct location. Refer to section 4.2.
- Do the mechanical installation. Refer to section 5.5.1.
- Do the electrical installation. Refer to section 5.5.5.
- Prepare for commissioning. Refer to section 5.6.

5.2 Site preparation

5.2.1 Prepare the site

1. Ensure that there's sufficient space and the airflow around the cabinet is sufficient.Refer to section 5.2.2.
2. If the local rules require the installation of an external residual-current device, install an external residual-current device.
3. Design the site so that the charging cables can reach to the inlet on the EVs. For the length of the charge cables.
4. Prepare the cables:

- AC input cable.
- PE cable. The diameter depends on the length, method of installation and other factors. Make sure that the PE wire complies with the safety instructions.
- Refer to section 3.7.
- Ensure that there's sufficient cable slack is sufficient to guide the cables inside the enclosure. Refer to section 5.5.5.

5.2.2 Control the space and airflow around the cabinet

1. Make sure that the footprint meets the requirements. Refer to section 7.2.3.
2. Make sure that the air flow inlet and outlet cannot be blocked. Consider of snow or other objects.

5.3 Prepare the foundation

5.3.1 Prepare the foundation - general procedure

1. Select the correct foundation based on the surface on which you're installing the cabinet.
2. Embed the cables in the ground with or without a cable duct. Refer to the local rules.

5.3.2 Prepare a standard prefab foundation

- If the EVSE is to be installed indoors or other areas where the altitude is high, then no foundation is needed. But, one thing need to be confirmed is that, the ground level should not exceed ±1.5mm per square meter, and the compressive strength of the concrete should not less than 30 MPa per standard cubic.
- If the EVSE is to be installed outdoors and the altitude is low, a concrete or steel trench base will be useful. The height of the concrete base is 200mm above the ground level (the recommended height: no less than 500mm below ground level). The mounting surface is preburied with stainless steel bolts (M14*6) with a thread of 30±3 mm above the ground. The design of the base depends on the actual situation on site, the following instructions can be referred to:

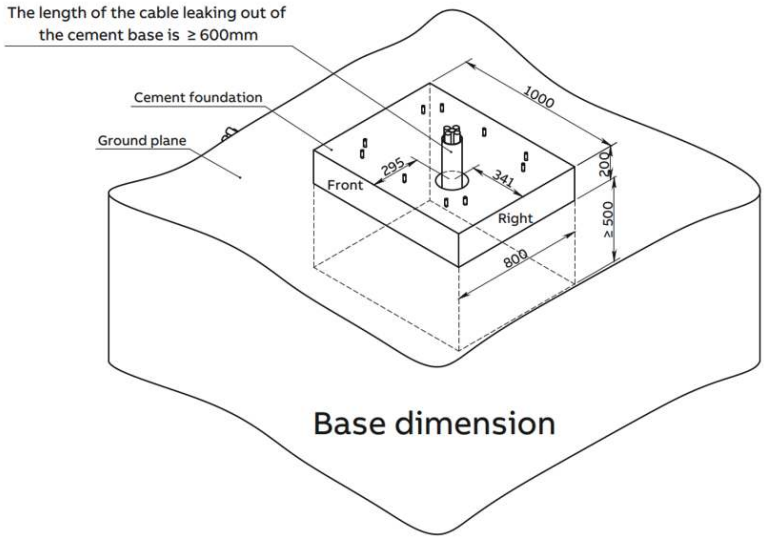

- Ensure the cables can be accessed through the pre-built tube on the figure, with a hole diameter of no less than 100mm.
- The base of the EVSE should be at least 200mm above the ground, which effectively reduces the risk of water immersion.
- At least 600mm of the cable should be exposed from the base for internal wiring.
- Fill holes inside and outside of the base with sand and gravel, and seal the holes with fireproof mud to prevent rodents, insects and other small animals from entering the EVSE.
- The proposal of mounting locating hole:

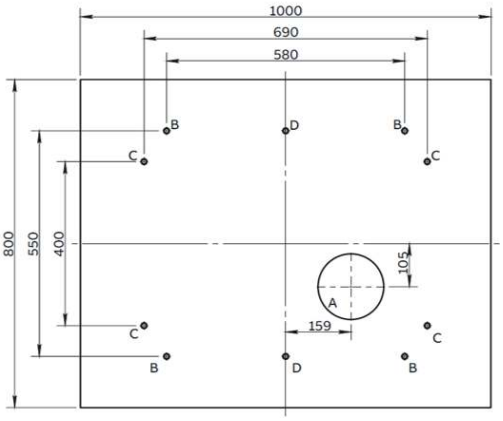

A	Inlet hole	B+D	Combine solution 1
B	Mounting holes (option 1)	C+D	Combine solution 2
C	Mounting holes (option 2)		

Note:
- Option 1 or 2 can be used for normal areas installation.
- In geologically complex areas, such as windy areas, geologically active areas, mining areas, the solution 1 or 2 is more suitable.
- The base is mounted with the expansion screws(M14) or pre-embedded bolts (M14).
- After the bolts buried, the threads should be at least 30±3mm above the ground.

5.4 Unpacking

5.4.1 Unpacking procedure

1. Do a check on the package of the EVSE.
2. Remove the packaging material.
3. Discard the packaging material.
4. Do a visual check for damage on the outside and inside of the EVSE.
5. Make sure that all parts are delivered according to the order.
6. If you find damage or the parts are not according to the order, contact the local representative of the manufacturer.
7. Remove the border covers. Refer to section 5.4.2.
   Remove the cabinet from the pallet. Refer to section 5.4.3.

5.4.2 Do a check on the transport sensors

1. Do a check on the sensors that record the maximum tilt during transportation.
2. If the sensors show a tilt that is too high (>40°), do these steps:
   For the transport specification, refer to:
   a. Refuse the delivery of the EVSE.
   b. Make a note on the delivery receipt.
   c. Within three days of delivery, ask the transport company for an inspection.
   d. If you see damage on the cabinet, through the packaging material, do not unpack the EVSE. Contact the manufacturer and give details of the delivery problems. Refer to section 1.12.

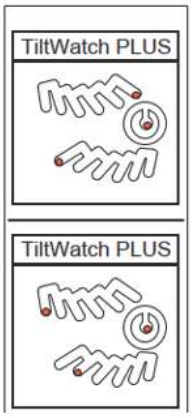

5.4.3 Remove the cabinet from the pallet

- Remove the wooden box packaging and air column bag from the base of cabinet.
- Unscrew and secure the screws on the side cover of cabinet.
- Open the U-shaped front and rear panels, and remove them from the base.

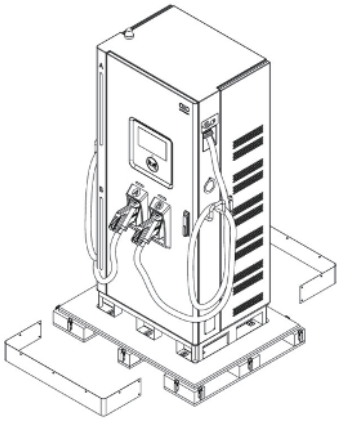

- Open the front door of cabinet.
- Check for loose cable ends or dislodged parts.
- Close the door.

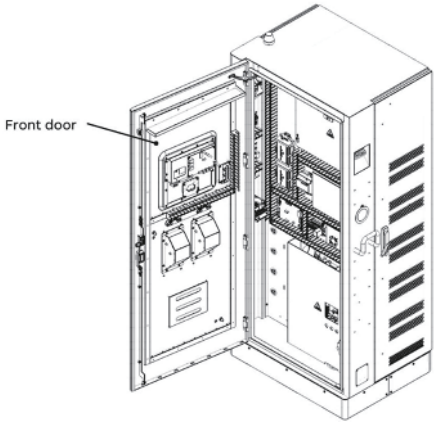

- Remove the screws connecting the pallet to the cabinet.
- Move the toes(A) of the forklift truck into the gaps of the cabinet.
- Raise the cabinet about 0.5m and place it on the mounting base.

Caution:

- Ensure that the cabinet holes are aligned with the bolt locations.

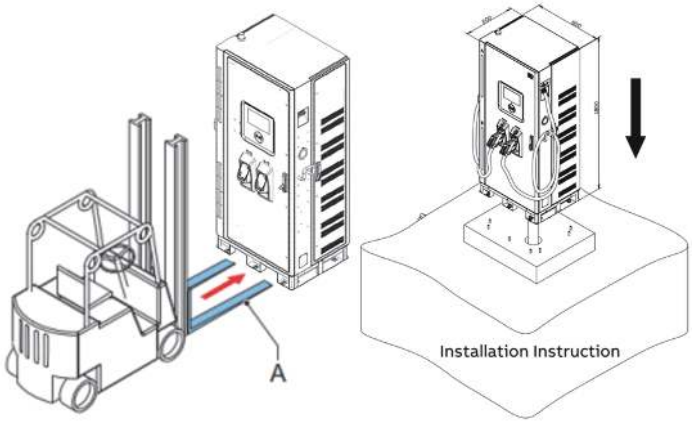

5.5 On-site installation

5.5.1 Mechanical installation procedure

Procedure:

1. Insert the key into the hole, turn the lock handle 90° clockwise, hold the handle and pull the front door outward.
2. Open the cable inlet and remove the rubber grommet.
3. Guide the cables through the openings in the cable guide plate.
4. Install these parts:

- Cabinet on the foundation. Refer to section 5.5.4.
- Adjust the position of the U-shaped side cover and place it on the base of the cabinet.
- Insert the screw into the locating holes and tighten the screws with a cross screwdriver, to a torque of 2.3N·m.

5.5.2 Wiring preparation

Procedure:

- Open the cabinet front door and remove the insulated board.
- Use a utility knife to make a cross cut in the middle of the rubber grommet.

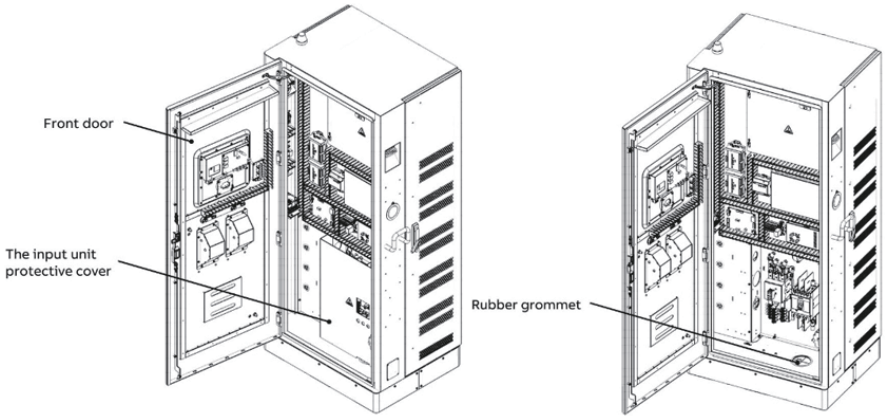

5.5.3 Guide the cables through the opening in the cable guide plate

Procedure:

- When passing the input cable through the rubber grommet, make sure that the input cable extends far enough.

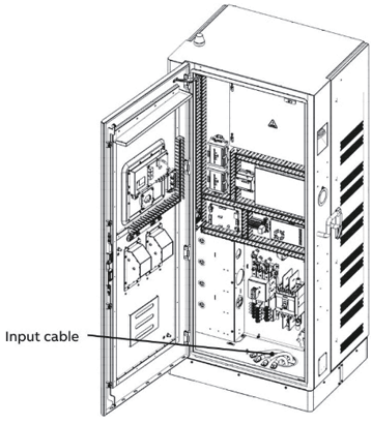

5.5.4 Install the cabinet on the foundation

Procedure:

- Install flat washers, spring washers, and M14 nuts on the floor bolts at the corners of the base or on the floor bolts on the left and right sides of the base.
- To lock these nuts, use a torque of 95.5N·m.

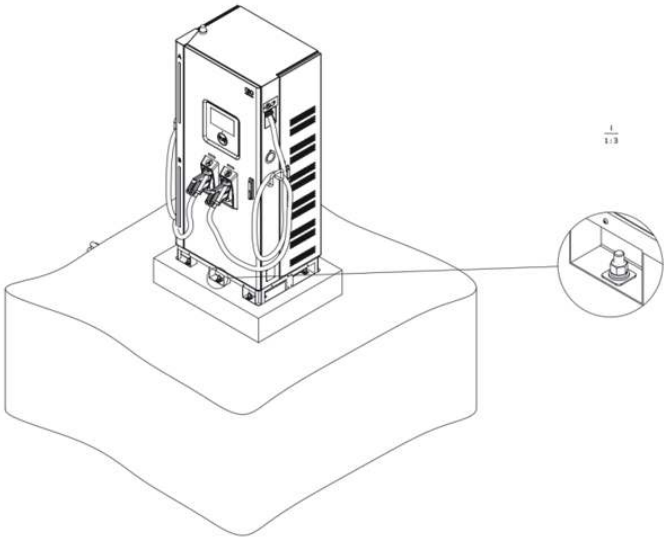

5.5.5 Connect the wires of the AC input cable

Procedure:

- Stripe the three phase and PE wires from the cable, make sure they are long enough to reach the terminals.
- Use a wire stripper to strip 20mm insulation from the ends of these wires.
- Crimp an OT terminal (M8) onto each wires.
- Open the insulation cover.
- Loosen the nuts on the harness.
- Connect the wires to the L1~L3, PE terminals in order: from left to right: L1 / L2 / L3 / PE.
- Tighten the L phase nuts to a torque of 12N*m, PE should be 5N*m.
- Install the insulation cover.

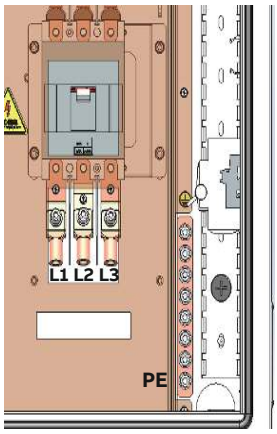

Caution:
AC input cable specification:
60kW: ≥3*35 mm²+1*16mm² 120kW: ≥3*70 mm²+1*35 mm²

It is recommended that the PE ground wire should be longer than normal phase wires. This ensures that the PE wire can be connected as efficiently as possible when the EVSE is hit accidentally.
The earthing system does not include the IT mode. If there's poor grounding on site, the separate ground is required by the installer.

Ensure that a 100mA RCDs of at least type A has been provided upstream for the charger.

5.6 Prepare for commissioning

1. Inform the owner that the EVSE is ready for commissioning.
2. Ensure that the site meets with these requirements:
- The EVSE is installed.
- AC input power is available.
- The owner need to present during the commissioning, to assist and energize the power to the EVSE on the power distribution board.
- Internet access is available, through 2G/3G/4G connection.
- The operator or owner may be instructed by the manufacturer's service engineer.
3. Make sure that these data are available:
- Contact data of the contact person on site.
- Address of the EVSE.
- Site name.
- Exact location of the EVSE: longitude and latitude. If there are more EVSEs on one location, make sure that the coordinates are slightly different (at least 0.0001 degree) so that the EVSEs are not at the same location on the map.
- Specification of the external fuse at the power distribution board.
- Date that the installation is done.
- Special remarks, for example to decline the authorization for the service engineer of the manufacturer to take photos.
- Photo of the surroundings of the EVSE.

6 Troubleshooting

6.1 Troubleshooting procedure

1. Try to find a solution for the problem with the aid of the information in this document.
2. If you cannot find a solution for the problem, contact your local representative of the manufacturer. Refer to section 1.11.

7 Technical data

7.1 Required tools for installation

Tools	Specification
Multimeter	-
Electric percussion drill	-
Percussion bit	Ø14
Tapeline	5m
Spirit level	-
Slot type screwdriver	-
Linesman pliers	-
Wire stripper	-
Wire crimper	-
Diagonal pliers	-
Hammer	-
Handling equipment	-
Insulated rubber tape	PVC
Personal protective equipment	-
Allen key	2.5#/ 5#/ 6#
Cross screwdriver	-
Open End Wrenches or Adjustable Wrenches	13#/ 21#

7.2 Dimensions

7.2.1 General dimensions

Parameter	Specification [mm]
Width of the cabinet	800
Depth of the cabinet	600
Height of the cabinet	1800
Length of the charge cable	5000

7.2.2 Package dimensions

Parameter	Specification [mm]
Length	1130
Width	880
Depth	2092

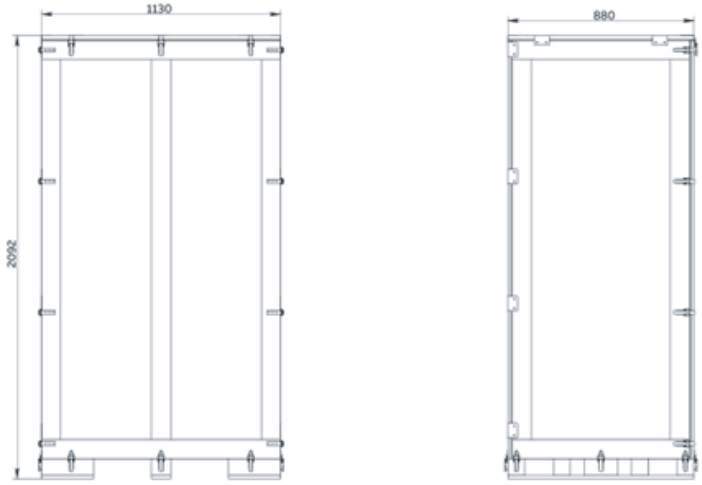

7.2.3 Floor space requirements

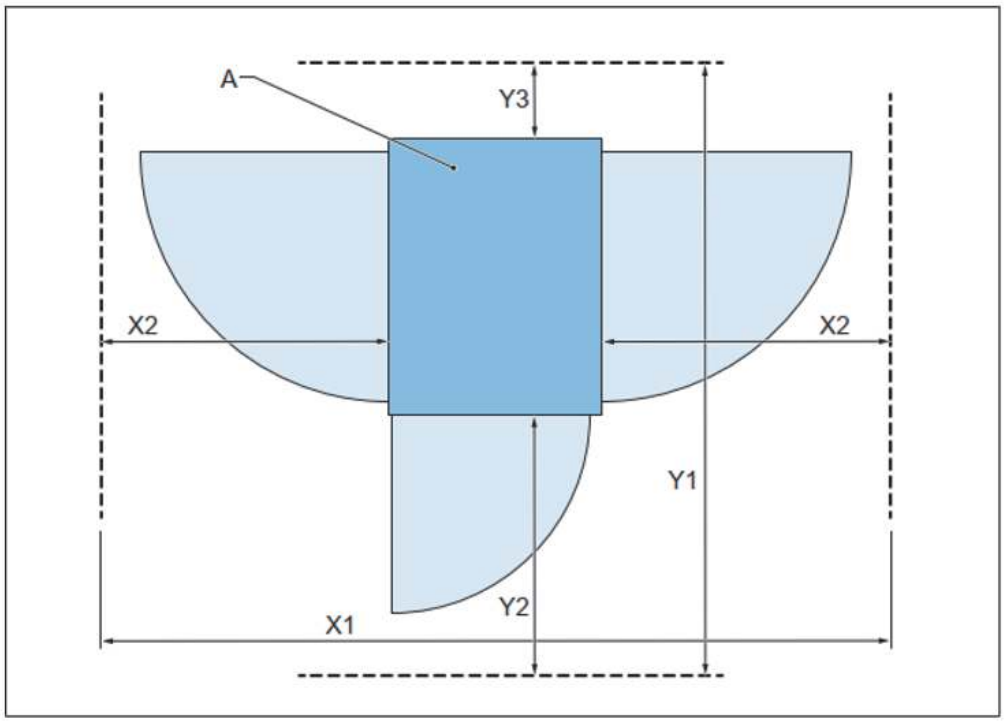

A Cabinet
X1 Total width
X2 Space for air inlet and to open the left and right doors
Y1 Total depth
Y2 Space to open the front door
Y3 Space for air outlet

Parameter	Specification [mm]
X1	2000
X2	600
Y1	1500
Y2	800
Y3	100

7.3 Parameter

		60kW	120kW
Power input	Input AC power connection	3P+PE	
	Input voltage range	400VAC±10%	
	Rated input current	100A AC	200A AC
	Frequency	50/60Hz	
	Power factor	＞0.99% @100% Po ＞0.98 @50%Po without control	
	Total harmonic distortion	＜5% @50%~100% load	
	Earthing systems	TT,TN-S,TN-C-S	
Power output	DC output voltage range	200~1000V DC	
	Rated output current	200A AC	250A AC
	Outlet options	2*CCS2 Cable	
	Cable length	Standard: 5m	
	Inrush current	＜110% rated current	
	Short circuit current	25kA	
	Standby consumption	≤73W	
	Efficiency	≥95% peak ＞94% @50%~100% load	
Mechanical	Dimensions (H×W×D)	1800×800×600(mm)	
	IP and IK rating	IP55, IK10 (screen IK08)	
	Mounting type	Floor mounted	
	Altitude	≤2000m	
	Weight	300kg	375kg
	Operating temperature	-25℃~+50℃	
	Storage temperature	-40℃~+70℃	
	Humidity range	5%-95%,no condensation	
	Noise level	<75dB at 1m distance	

		60kW	120kW
System	Screen type	10-inch LCD touch screen	
	Language	Standard: English	
	Network type	Ethernet,4G	
	Communication protocol	OCPP 1.6J	
	Payment method	QR code, Auto charge, RFID	
	RFID system	Mifare ISO 14443A+B	
	Protection	Over/under Voltage Protection, Surge Protection, Short Circuit Protection, Leakage Detection, Over Current Protection, Over Temperature Protection, E-Stop Protection	
	EMC level	Class A	

CHARGEDØT